ORTAL
YOUR LIFE. YOUR FIRE

130 LS

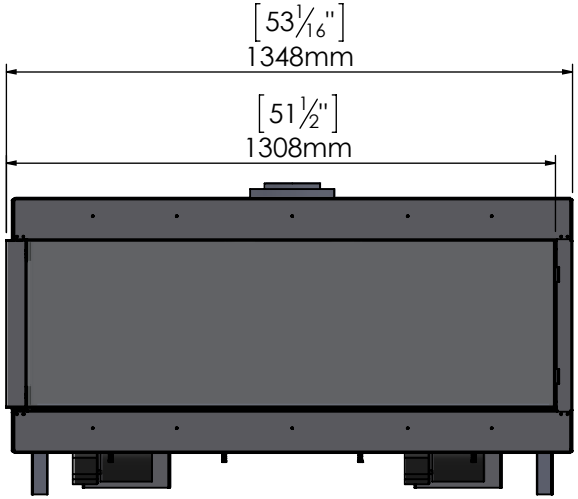

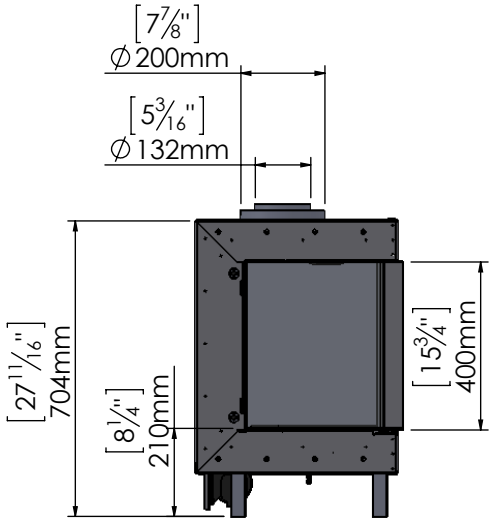

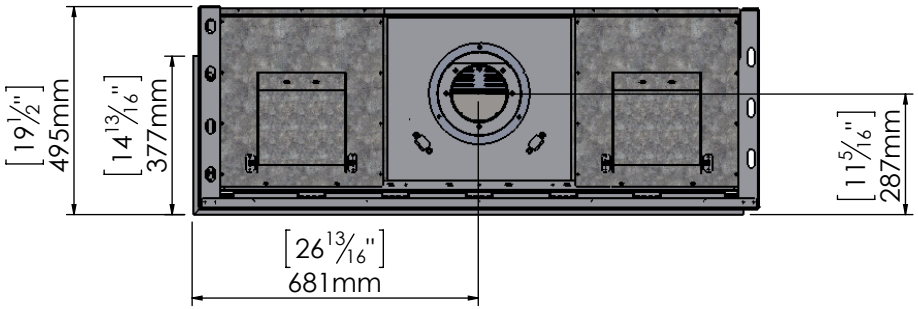

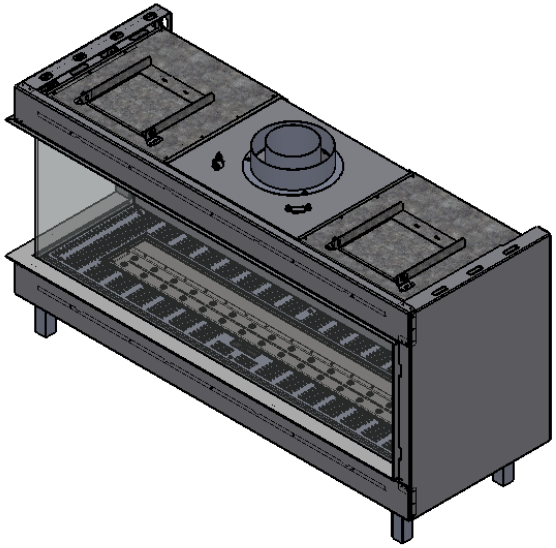

1/31/2018