ORTAL
YOUR LIFE. YOUR FIRE

170 RS

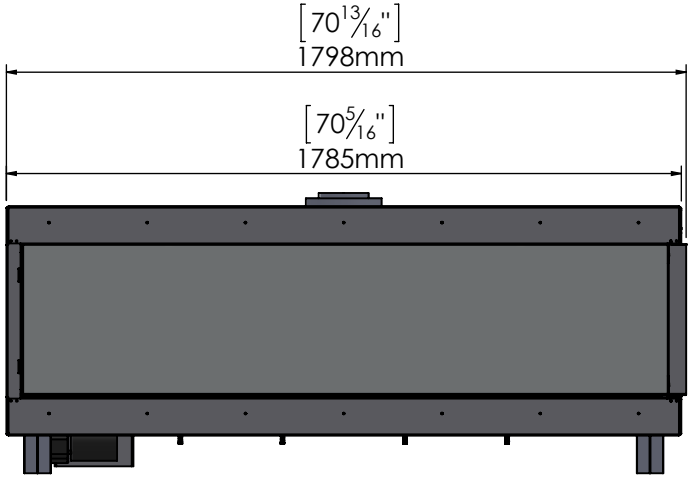

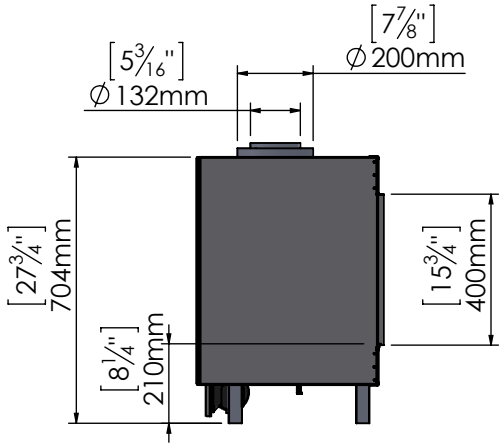

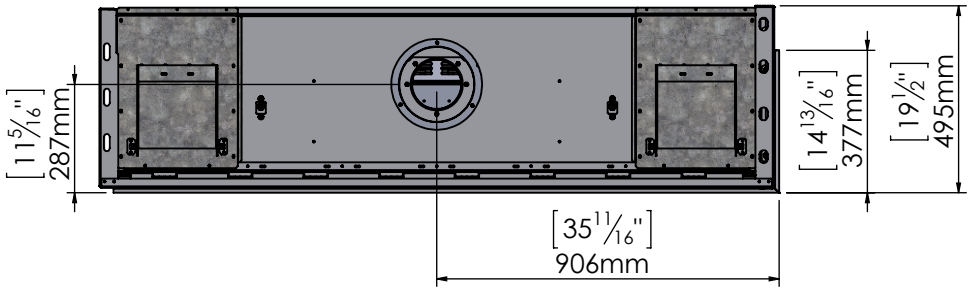

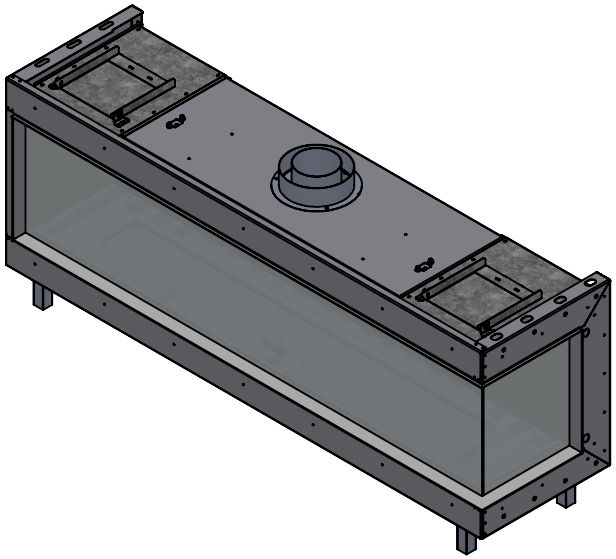

2/5/2018