ORTAL
YOUR LIFE. YOUR FIRE

150 RS

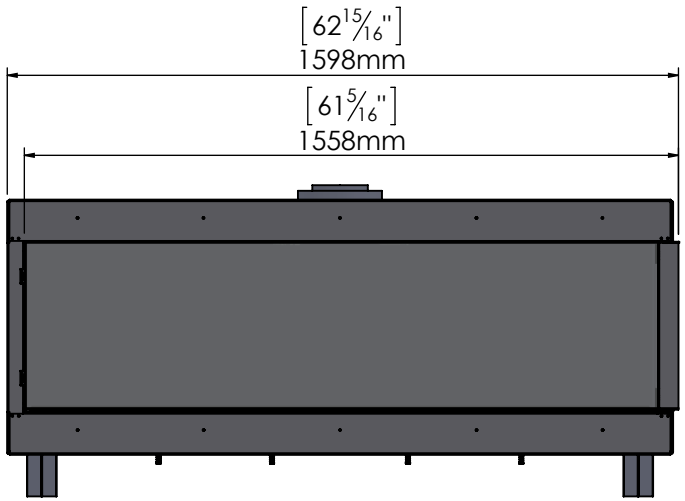

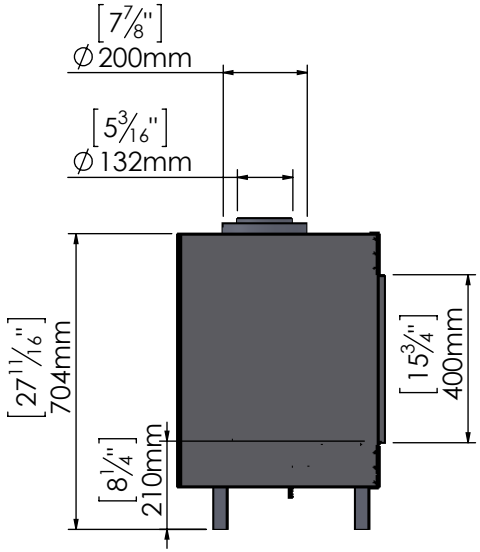

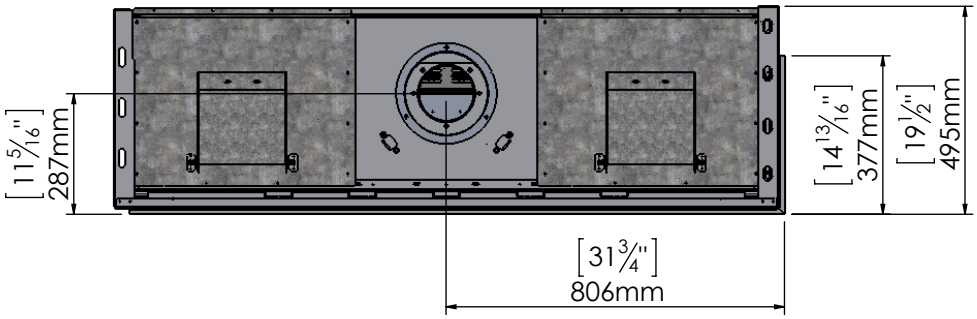

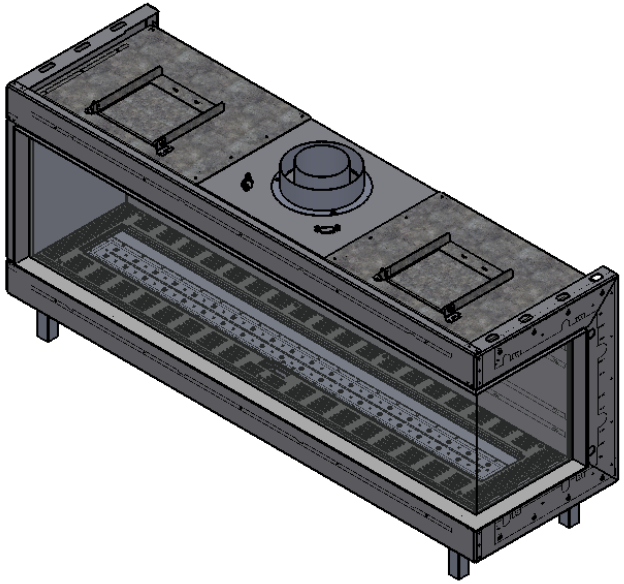

11/13/2017